Bypass Transition of Compressible Plane Poiseuille Flow

Al Moez Yahyaoui, Dept. of Mechanical Engineering and Intelligent Systems, UEC, Chofugaoka, Chofu-shi, Tokyo
Hiroshi Maekawa, Dept. of Mechanical Engineering and Intelligent Systems, UEC, Chofugaoka, Chofu-shi, Tokyo

An early transitional stage was concluded from our previous works, however our ambitions motivated us to simulate the later stages that occur before the breakdown of the flow. We spatially simulated subsonic plane Poiseuille flow in a computational box that is twice longer the one we simulated before (x=20L, y=2L, z=4L & 2L). Early data analyses showed that the flow fields exhibit the same basic features as in the 10L case; the elongated streaky and vortical structures, the quasi spanwise coherence, the dominance of low frequencies corresponding to those structures etc (see ref. 1 for details). However this near wall structure showed a continuos stretching downstream then became unstable by oscillating in the spanwise direction and this might be a sign of the flow getting ready to breakdown. As a matter of fact, this behavior was expected since it was observed in the numerical simulation of Lesieur *et al* (see ref. 2) and in the incompressible experiment of Alfredsson *et al.* (see ref. 3).

1. Introduction

It is well known that the near wall structure is the road to turbulence in wall bounded flows. It is almost certain that many features in channel flow transition to turbulence apply to the boundary layer transition. We numerically investigated the development of near wall structure in subsonic plane Poiseuille flows to compare them with their counter part incompressible ones (lower Mach number DNS) while keeping an eye on the compressibility effect (higher mach number DNS). The compressibility is a very important consideration since compressible flows can be found in many applications (from tansatmospheric flight to gas turbines). Understanding the near wall structure generation and behavior would allow engineers to control the flow (i.e. manipulating the spanwise velocity gradient in channel flow and boundary layer maybe an effective control mechanism for reducing the drag and/or the turbulent energy production).
The three dimensional time-dependent compressible Navier-Stokes equations were numerically solved to study spatially developing plane Poiseuille flows undergoing transition.
In the numerical simulations, high-order compact finite difference scheme[4], was used in the (x) and (y) directions, however, a classical Fourier method[5] was employed in the treatment of the periodic (z) direction.

2. Results

Numerical results of previous (case 1) and new (case 2) simulations are presented.

2. 1. Case 1 (x=10L)

An early transitional state scenario was concluded from the simulations; After reaching the laminar regime, the flows were perturbed at the inlets with random disturbances, which gave birth later to near-wall vortical structure then low/high speed streaks. These coherent vortical and streaky structures evolved downstream with longitudinal elongation and quasi-periodicity in the spanwise direction. For numerical simulations executed with disturbance amplitudes less than 5%, the near wall structures were not reproduced, suggesting the existence of thresholds for the disturbances to onset the transition. The same transition mechanism was observed in the incompressible experiments of Klingmann[6].
Figure 1 shows the evolution in time (from t=140 to t=148) and space of the vertical vorticity and the fluctuation of the streamwise velocity component near the wall, for Re=2500, M=0.5 and 5% of random disturbances. After random forcing at the inlet, the near wall vertical vorticity develops downstream and interact with the generated streaks. The streaks are located between the counter rotating vortices. Longitudinal elongation and quasi-periodicity in the spanwise direction are observed.

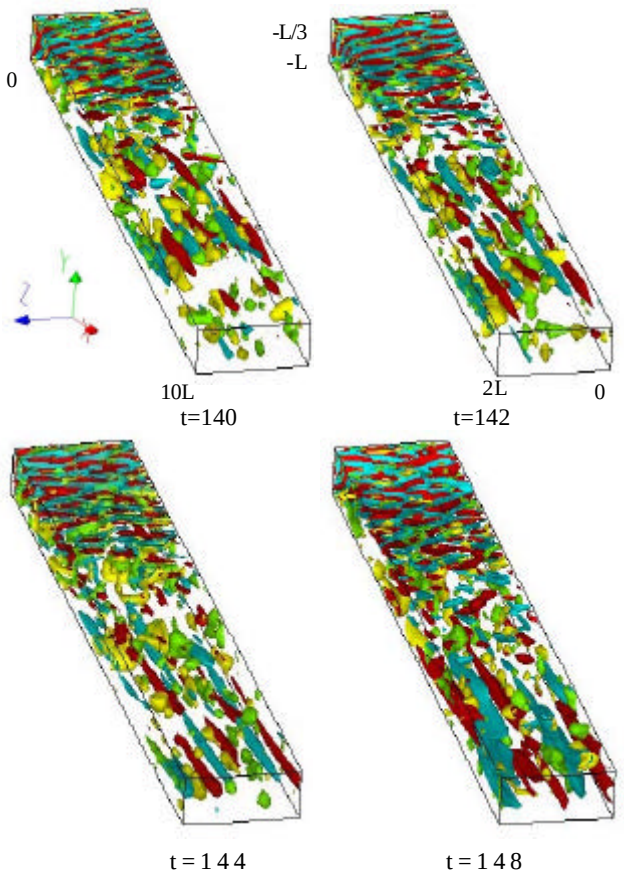

Figure 1. Near wall structure. (w_y^+ =0.06 (red), w_y^- =-0.06 (blue), Uf^+ =0.01 (yellow) and Uf^- =-0.01 (green))

2. 2. Case 2 (x=20L)

Two simulations were performed, for Re=2550 and M=0.5, to see the effect of the disturbances on the transition process. The first DNS (case 2-a) consists on perturbing the inlet with 7.5% of random noise whilst in the second one (case 2-b) we perturbed the inlet with 15% of random noise. Figure 2 and figure 3 present the flow fields (streaks and vertical vorticity) at t=550. It is worth noting that the span of the computational box in case 2-b is half the one used in case 2-a.

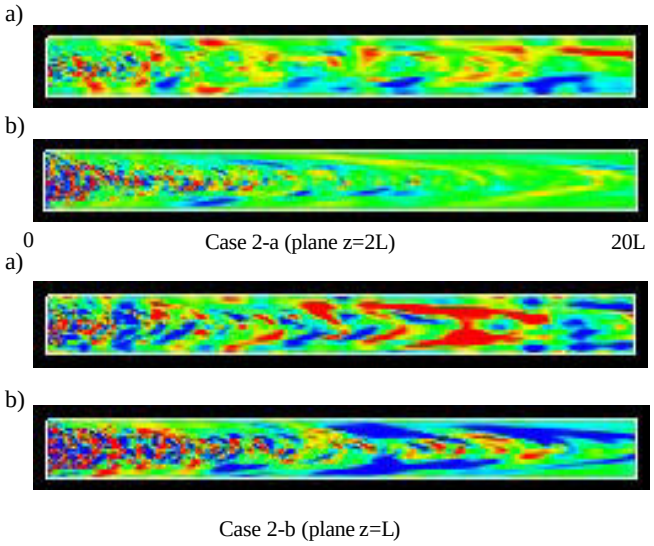

Figure 2. Side views of a) streaks (Uf^+ (red)/ Uf^- (blue)) and b) vertical vorticity (w_y^+ (red)/ w_y^- (blue)) at t=550.

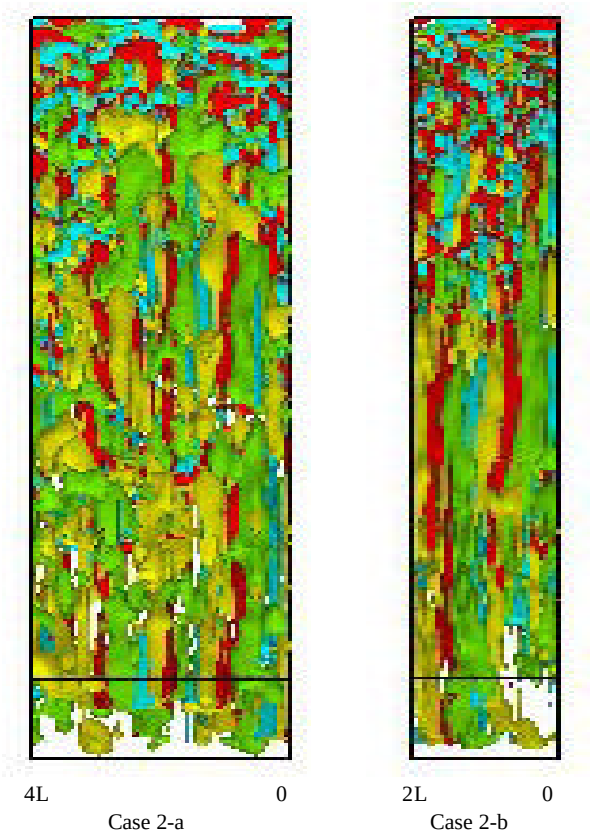

Figure 3. Top views of the streaks and the vertical vorticity at t=550 (same color legend as in Fig. 1).

Although these figures show the same features (the elongated streaky and vortical structures, the quasi-spanwise coherence etc.) which were found to be the origin of the early transition, there are some differences. In the 15% case, the streaks are stronger and clearly oscillate in the spanwise direction (strong three dimensionality aspect of the flow), however even the streaks do oscillate, the flow is barely three-dimensional. After observing this behavior of the streaks we speculated that the near wall structure fluctuate with low wave number but we couldn't be certain about this fact without doing the spectra analysis.

In the following, we present the results corresponding to the two cases. The spectra are very similar in the two cases but the energy level is higher in case 2-b than case 2-a. Dominant low frequencies were present in the U and w_y spectra near the wall which explains the coherence of the near wall structures (streaks and vertical vorticity). As for the w_x spectra, no low frequencies were present at the near wall region and we do think that the high frequencies present at the wall are from an acoustic nature since they are present in the P spectra and the divergence spectrum as well (not shown here).

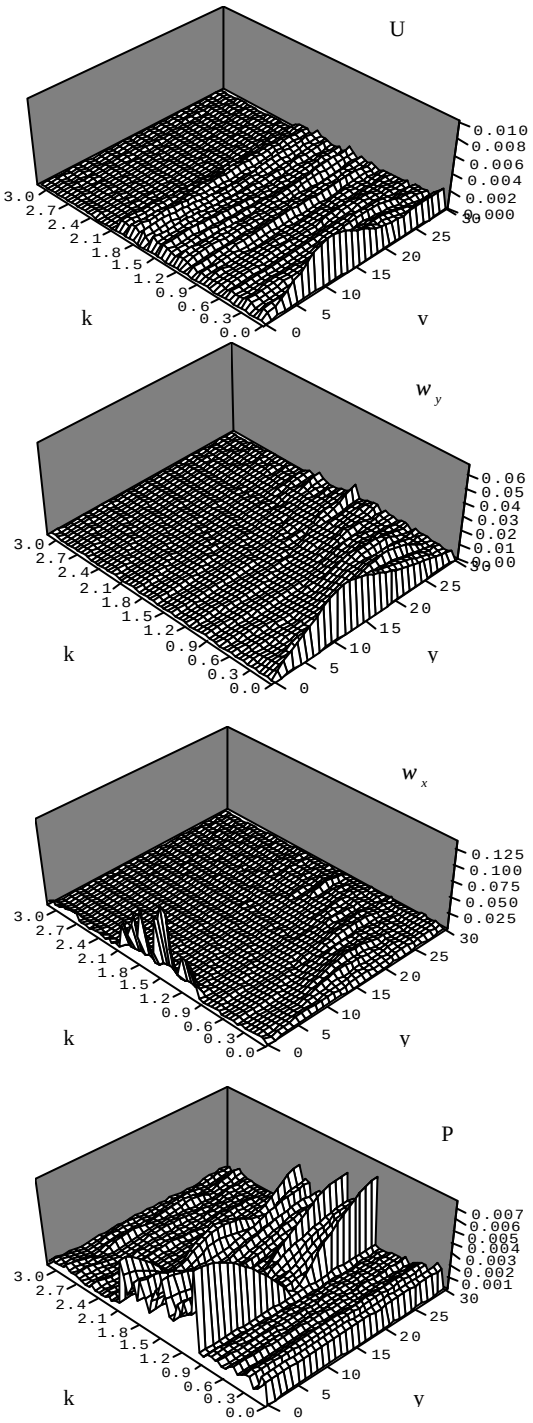

Figure 4. U, w_y, w_x and P spectra at x=15L (case 2-b)

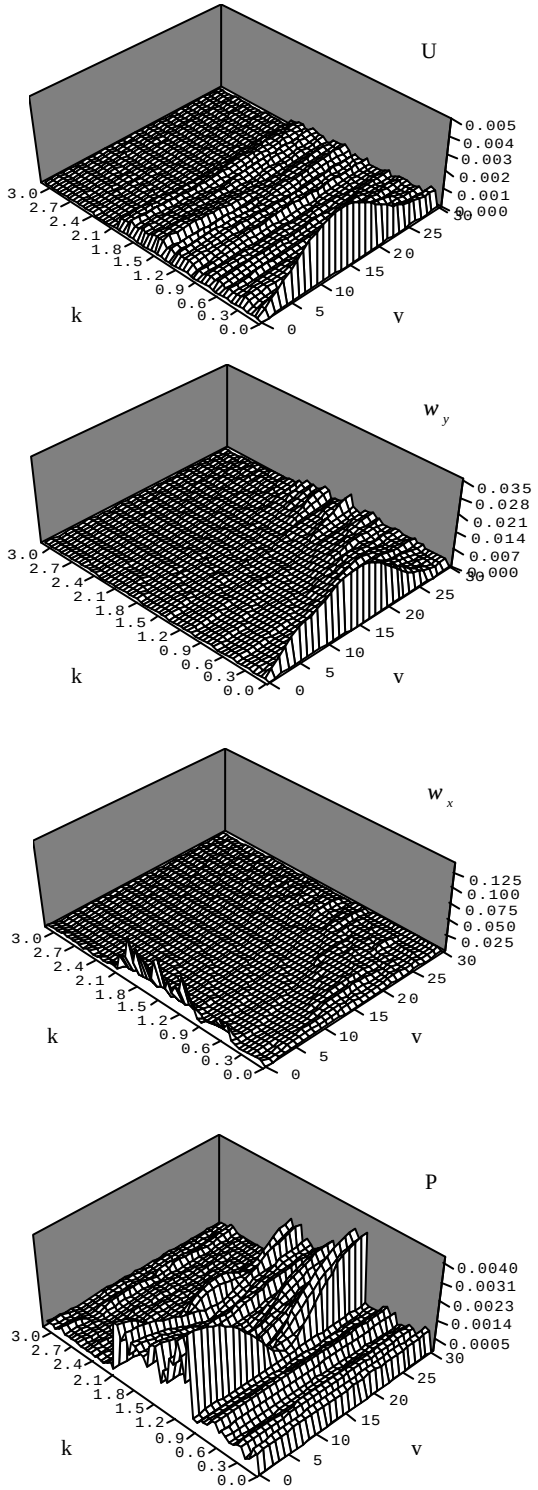

Figure 5. U, w_y, w_x and P spectra at x=15L (case 2-a)

3. Summary

One road to breakdown in wall bounded flows is the so-called Bypass transition. We performed direct numerical simulations to investigate this mechanism in subsonic plane Poiseuille flow. The near wall region is the key player in this flow's transition which started with the generation of coherent vortical and streaky structures, downstream stretching and elongation, spanwise oscillation (depending on the forcing level) then probably turbulent spot appearance (Figs. 6 & 7).

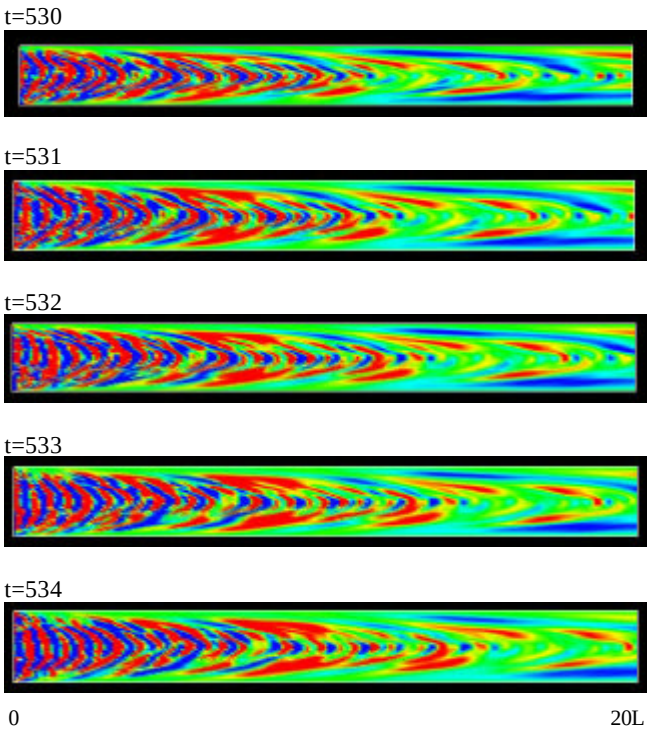

Figure 6. Evolution of w_y^+ (red)/w_y^- (blue) for M=0.5 & Re=2500 (contours in x-y plane at z=2L).

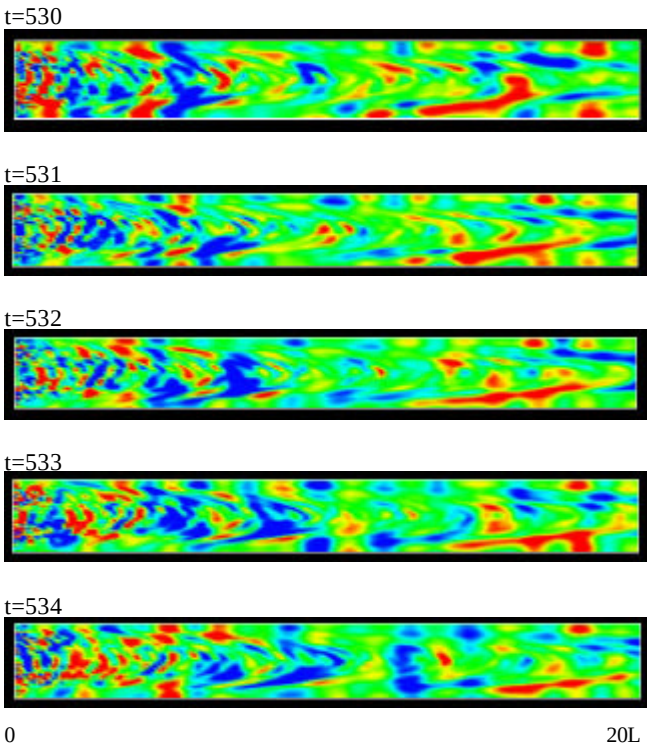

Figure 7. Evolution of Uf^+ (red)/Uf^- (blue) for M=0.5 & Re=2500 (contours in x-y plane at z=2L).

References

(1) Yahyaoui, M., Maekawa, H. and Yamamoto, K., DNS of subsonic Poiseuille flows undergoing transition, Turbulence, Heat and Mass Transfer 3, (2000) p.267-274.
(2) Ducros, F., Comte, P. and Lesieur, M. 1996. Large-eddy simulation of transition to turbulence in a boundary layer developing spatially over a flat plate, J. Fluid. Mech., Vol. 326, p.1-36.
(3) Elofsson, P. A., Kawakami, M. and Alfredsson, P. H., Experiments on the stability of streamwise streaks in plane Poiseuille flow, Phys. Fluids, Vol. 11, No. 4 (1999), p.915-930.
(4) Lele, S. K. 1992. Compact Finite Difference Schemes with Spectral-like Resolution. J. Comput. Phys. 103: 16-42.
(5) Canuto, C., Hussaini, M.Y, Quarteroni, A., Zang, T.A. 1988. Spectral Methods in Fluid Dynamics: Springer-Verlag.
(6) Klingmann, B. G. B. 1992. On transition due to three-dimensional disturbances in plane Poiseuille flow, J. Fluid Mech., Vol. 240, p.167-195.